USER'S MANUAL
iROBOTICS 11 SERIES

The World's Top Medical Massage Chairs®
WITH BUTTERFLY MASSAGE TECHNOLOGY™

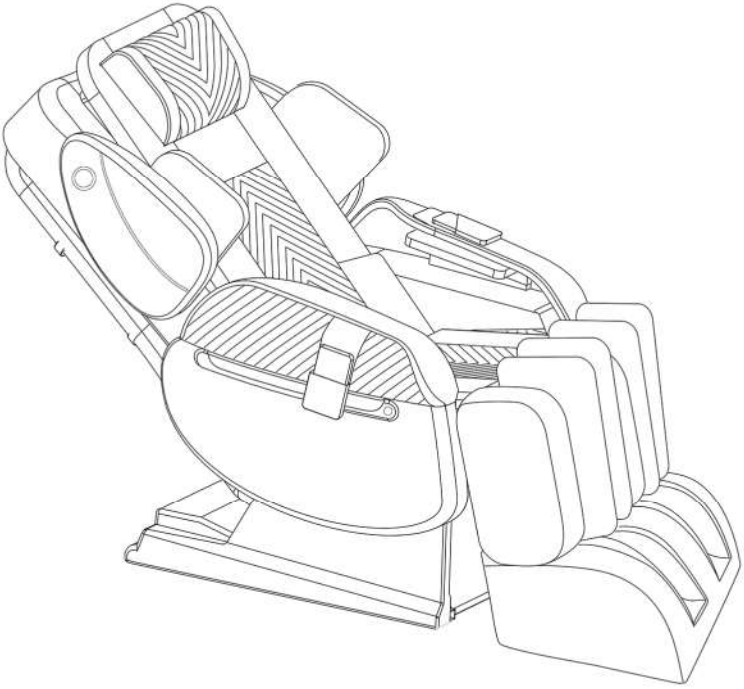

FDA REGISTERED c UL us

LURACO® The Power of American Engineering®

Congratulations on your purchase of a new Luraco Medical Massage Chair!

We are pleased that you have chosen Luraco for your massage chair purchase. We hope you will enjoy the quality, convenience, and excellent performance of your new Luraco iRobotics 11 (i11) Max Plus Series Medical Massage Chair. We know from experience that you will soon be telling your friends and family about the health benefits of using a massage chair at home, and how enjoyable and easy it is to operate the Luraco i11 Series Medical Massage Chair.

This product and its subsystems have been awarded with the following U.S Invention Patents

US10092480, US10724549, US10639230, US10891000, US10842708, US10905624, US10849819, US11110030, D772628, D772593 & 6 Patents Pending

i11 Series: The 11th Generation of The World's Top Medical Massage Chairs® by Luraco Technologies

INNOVATION + QUALITY + LUXURY

In an effort to revolutionize the massage experience, Luraco, the world's leader in massage chair R&D and manufacturing, has successfully developed a 11th generation of The World's Top Massage Chair product line. Bringing together all aspects of innovative technologies, massage therapy techniques, healthcare and entertainment features into one ingenious and comprehensive machine, the i11 Series are truly the Industry's Most Unique and Advanced Massage Chairs.

LURACO MASSAGE CHAIRS ARE BUILT FOR THOSE THAT EXPECT TOP QUALITY, LUXURY, RELIABILITY, COMPORT AND RELIEF

TABLE OF CONTENTS

	Page #
I. IMPORTANT SAFETY INSTRUCTIONS	4
1. Basic precautions	4
2. Grounding Instructions	5
3. Medical Warnings and Emergency Stop	6
4. Additional Safety Precaution	7
5. Methods of storage	8
6. Cleaning Methods	9
II. INSTALLATION INSTRUCTIONS	10
1. Step 1: Unpack the boxes	10
2. Step 2: Assemble the Footrest	10
3. Step 3: Assemble the Armrests	13
4. Step 4: Remote Control Installation	15
III. UNDERSTANDING REMOTE CONTROL FEATURES	16
1. Quick Instruction for Remote Main Screen	17
2. Start/Stop the Chair	17
3. Automatic Massage Modes	17
4. Manual Massage Modes	19
5. System Settings	21
6. Heat and Warm Chair Settings	25
7. Chair Adjustments	26
8. Massage Intensity Adjustments	28
9. User Profiles	29
10. Special Edition Screens	31
IV. HOW TO USE THE i11'S UNIQUE FEATURES	32
1. Powered Armrest Open/Close for Easy Access	32
2. Shoulder Massager Position Adjusts	33
3. Helpful Tips	33
4. Health Benefits of Massage	34
V. HEALTH CARE DEVICE- BP MONITOR (Optional)	35
VI. TROUBLESHOOTING THE MASSAGE CHAIR	35
VIII. MAINTENANCE INSTRUCTIONS	37
VIII. WARRANTY INFORMATION	37
1. For Home Use	38
2. For Commercial Use	38
IX. DISCLAIMERS	41

I. IMPORTANT SAFETY INSTRUCTIONS

1. When using an electrical mechanism, basic precautions should always be followed, including the following: Read all instructions before using.

WARNING – To reduce the risk of burns, fire, electric shock, or injury to persons:

1. The main power switch is marked with international symbols "O" and "I". The switch in position "I" means that system is on, and the switch in position "O" means that system is off.
2. The chair should never be left unattended when plugged in. Unplug from outlet when putting on or taking off parts.
3. Do not wear shoes, jewelry, glasses, or watches of any kind.
4. Close supervision is necessary when this chair is used near children, invalids, or disabled persons. Keep children away from extended foot support (or other similar parts).
5. Use the chair only for its intended use as described in this manual. Do not use attachments not recommended by the manufacturer.
6. Never operate the chair if it has a damaged cord or plug, if it is not working properly, if it has been dropped, damaged, or dropped into water. Return the chair to an authorized service center for examination and repair.
7. Keep the cord away from heated surfaces.
8. Do not use outdoors.
9. Do not operate where aerosol (spray) products are being used or where oxygen is being administered.
10. To disconnect, turn power switch to the off position, then remove plug from outlet.
11. Connect this chair to a properly grounded outlet only. See Grounding Instructions.
12. Do not remove the back cushion and do not play with roller mechanism.
13. Do not remove the bottom seat and do not play with actuators.
14. Keep the cord out of heavy traffic areas. To avoid fire hazard, NEVER put the cord under rugs or near heat generating devices.
15. Always unplug the power cord from the electrical outlet before cleaning.
16. Do not operate any chair with damaged parts.

17. Any other use not recommended by the manufacture may cause electrical shock or injury to persons.
18. Do not touch or re-wire the connectors to the master-box.
19. Do not attempt to repair or adjust any electrical or mechanical functions on this unit. Doing so will void the warranty.

After reading this user's guide, if you have any questions or comments, please call 1-817-633-1080 or contact our technical support department at Support@Luraco.com or visit our website at www.LuracoChairs.com for more information.

2. Grounding Instructions

This product must be grounded. If there is a malfunction or breakdown, the grounding provides a path of least resistance for electric current to flow, thus reducing the risk of electric shock. This product is equipped with a cord having an equipment-grounding conductor and a grounding plug. The plug must be plugged into an appropriate outlet that is properly grounded in accordance with all local codes and ordinances.

DANGER - Improper connection of the equipment-grounding conductor can result in a risk of electric shock. Check with a qualified electrician or serviceman if you are in doubt as to whether the product is properly grounded. Do not modify the plug provided with the product, if it does not fit the outlet; have a proper outlet installed by a qualified electrician.

Followed by either instruction a) or b) below:

a) This product is for use on a normal power circuit and has a grounding plug that looks like the plug illustrated in sketch A in Figure 1 below. A temporary adapter that looks like the adapter illustrated in sketches B and C may be used to connect this plug to a 2-pole receptacle as shown in sketch B if a properly grounded outlet is not available. **The temporary adapter should be used only until a properly grounded outlet (sketch A) can be installed by a qualified electrician.** The green colored rigid ear, lug, or the like extending from the adapter must be connected to a permanent ground such as a properly grounded outlet box cover. Whenever the adapter is used, it must be held in place by a metal screw.

b) This product is for use on a normal power circuit and has a grounding plug that looks like the plug illustrated in sketch A in Figure 1 below. Make sure that the product is connected to an outlet having the same configuration as the plug. **No adapter should be used with this product.**

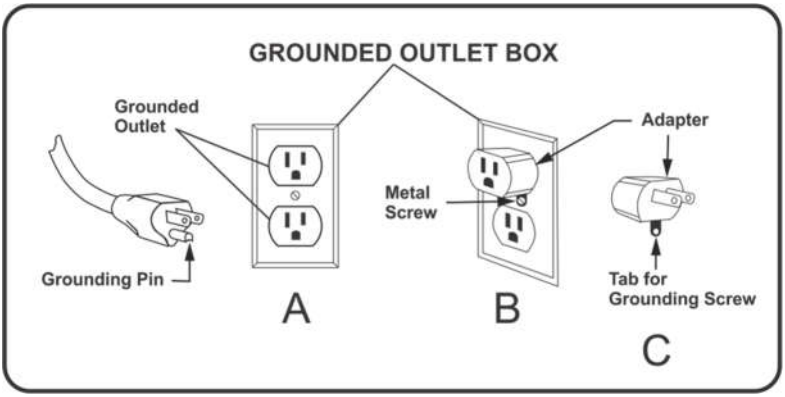

Fig.1: Grounding Instruction

3. MEDICAL WARNINGS – NOT RECOMMENDED FOR:

- **Pregnant women**
- **People with distorted joints, broken bones, skin infection or injury**
- **Children under 14 years of age**

If you have any of the above medical issues or any other concerns, please consult your doctor before using the massage chair.

DO NOT:

- **Allow children or pets to play near the chair, especially during operation.**
- **Use any massage function on the head.**
- **Massage abdominal area or kneecap region.**
- **Leave mobility impaired or speech impaired persons alone in chair.**
- **Wear shoes, jewelry, glasses, or watches of any kind.**

EMERGENCY STOP

In case of emergency, press the power button on the bottom of remote screen to stop the operation.

4. Additional Safety Precautions

- Do not use more than 30 minutes per session.
- Do not operate near young children or pets.
- Do not move the machine by pushing on the armrest or backrest.
- Do not place or store the chair near damp places such as swimming pools or bathrooms.
- Do not forcibly press on the massage rollers.
- Do not stand on the chair or store heavy items on the chair.
- Do not use in an environment which is dusty, greasy or lacking oxygen.
- Do not place near steam, oven, open fire, or heat.
- Do not place directly in the sun.
- Do not use electric blanket while using the massage chair.
- Do not use outdoors.
- Do not use while smoking.
- Do not eat or drink in chair when operating.
- Do place this chair horizontally with space over 81 inches, enough for full recline mode.
- Do place on level floor.
- Do wear suitable clothing at all times while using.
- This chair has a heating option. People sensitive to heat must be careful when operating the chair when the heat option is on.

Note: Do not use the chair as a bed or to sleep on over a long period of time. The recommended time of use is 20 minutes. Prolonged massaging may cause aches, muscle or nerve issues. (The preferred total duration of massaging within the day should be 30 minutes total or less).

CAUTION FOR USERS

- This device should not be used until grounded.
- **Do not sit or place heavy objects on the armrest, footrest or back of the chair to avoid overturning or damaging the chair.**
- In the course of normal use, lift the back cushion regularly to check for any damage or cracks in the fabric of the cushion. Please stop using immediately even if there is minor damage and turn the power switch off. Send the cushion in for repair to avoid possible electric shock.
- Do not move the chair while power cord is connected.

- Do not pull the fabric forcefully or stab it with sharp objects which can result in injury or damage to the chair.
- Do not move the chair on wooden floor, carpet, or other easily damaged flooring.
- Children and pets should not be allowed to play around chair.
- Please be sure that no people, pets, or other objects are behind the chair or under the legs before reclining or lowering the leg massager.
- Do not put your hands or head under the chair.
- When using the massage chair, ascertain that the footrest is in the lowest position.
- Do not use immediately after meals.
- Do not use the massage chair when your body is wet or moist as it can result in electrical shock.
- Do not operate with more than one person.
- Do not use when wearing head ornamentation as it can result in injury.
- Do not stumble over electrical wires or connections.
- Do not touch the inner parts of the chair as this can cause damage and electrical shock.
- Do not dismantle and remove inner parts or repair the massage chair.

Do Not Use the Chair under the Following Conditions

- When the chair has been exposed to water or fails to operate.
- If power cable is damaged.
- Please stop using the massage chair immediately and consult a doctor if you feel abnormal or extremely achy during the course of the massage.
- If a power failure occurs.
- When the massage chair malfunctions during the course of operation.
- Do not operate during a lightening or thunderstorms.

5. Methods of Storage

- Do not dismantle the back of the chair.
- Keep the massage chair free of dust.
- Cover the chair with dust-free cloth to prevent dust from collecting.
- Do not store in a hot, humid, damp place nor in direct sunlight or heat.

6. Cleaning Methods

- Before cleaning unplug from electrical source to avoid shock.
- Clean the chair surface with mild cleanser.
- Use leather cleaner and leather conditioner.
- Dust can be cleaned off with a damp cloth using mild cleanser and let air dry.
- Do not spray pesticides on the device.
- Do not use a damp cloth on the electronic components, as it may cause shock and damage.

7. Chair Placement

There must be enough space around the chair for proper operation. There should be a clearance of 36 inches from the front of the chair to the wall, 12 inches from the wall to the backrest, and 18 inches from the wall to the closest armrest to allow for easy access.

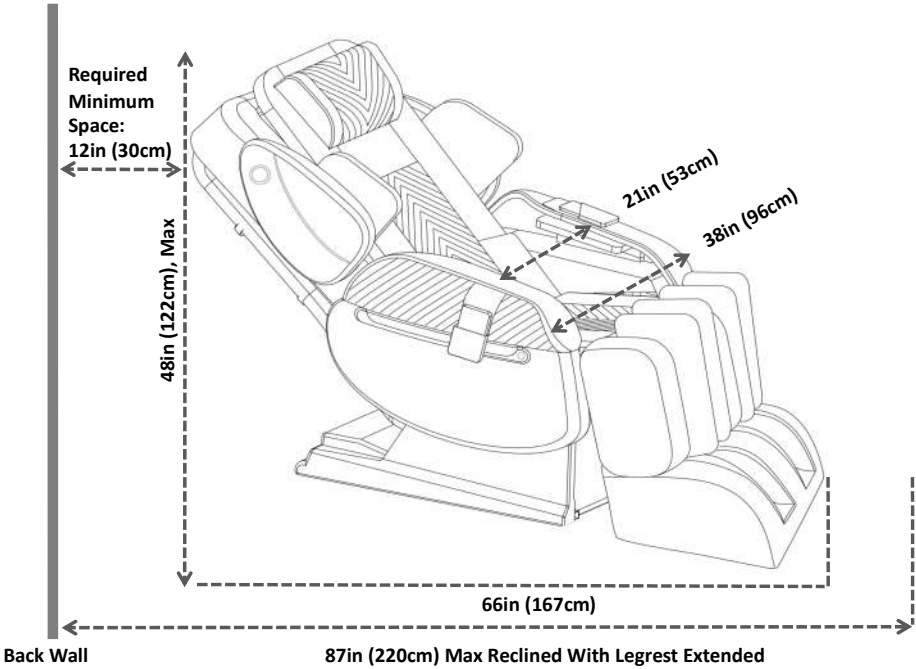

Fig.2: Space Requirement

II. INSTALLATION INSTRUCTIONS

ATTENTION: Do not turn on power until all installation is complete. For more detailed instructions, please watch the i11 Series "how to install" videos at www.luracochairs.com

Step 1: Unpack the main box

Carefully take out the chair's main body, footrest, armrests, and remote control packages from the main box.

Note: i11 Series chair requires at least two people to assist with assembly.

ATTENTION:

Be sure no children, pets, or objects are around chair. Allow enough space for installation.

Step 2: Assemble the Footrest

Please refer to Fig. (3-6) and follow the steps (1-6) below to install the Footrest.

1. Install the Footrest hinges. Slowly align the footrest with the chair main body and install the lock-pins (2pcs) for the footrest hinges **(Fig.3, Step 1)**
2. Lift the Footrest to give space for further installation steps **(Fig.4, Step 2)**
3. Insert the empty Footrest box underneath the footrest to support it. **(Fig.4, Step 3)**
4. Insert all cables and air tubes through the aperture in the chair front cover **(Fig.4, Step 4)**
5. Pull and Lift the chair Front cover up to give room for next step. **(Fig.4, Step 5)**
6. Assemble the electrical connectors (4pcs). **Make sure the color marks/numbers are matched, and connectors are locked by tightening the locking nuts (Fig.5, Step 6).**
7. Assemble air connectors (5pcs). **Make sure the color marks/numbers are matched (Fig.5, Step 7).**
8. Put back the chair front cover. Make sure left and right edges of the front cover are properly inserted into the guiding rails **(Fig.6, Step 8).**

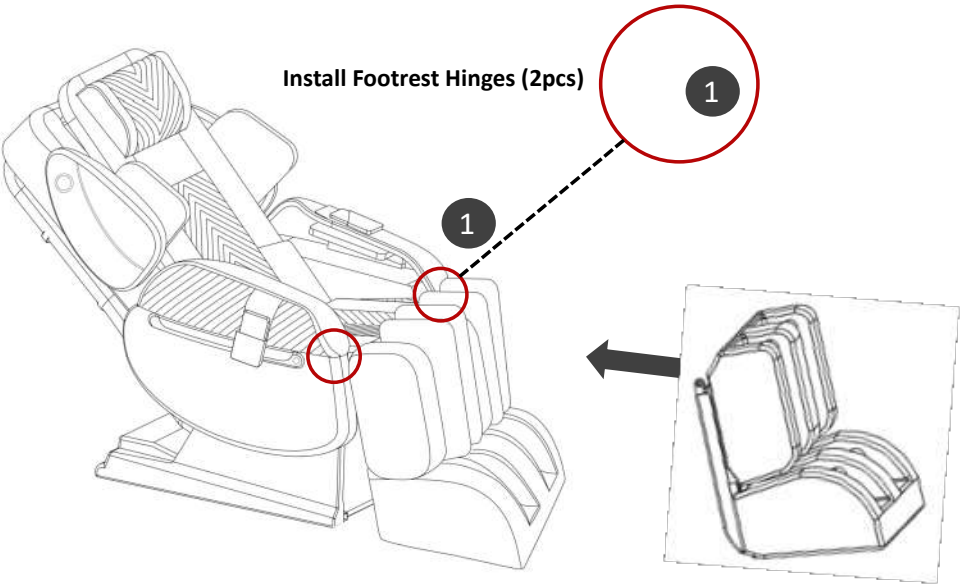

Fig.3: Footrest Assembly

Lift the Footrest up
(Note: Use the Footrest Packing Box to support the bottom of the Footrest during installation)

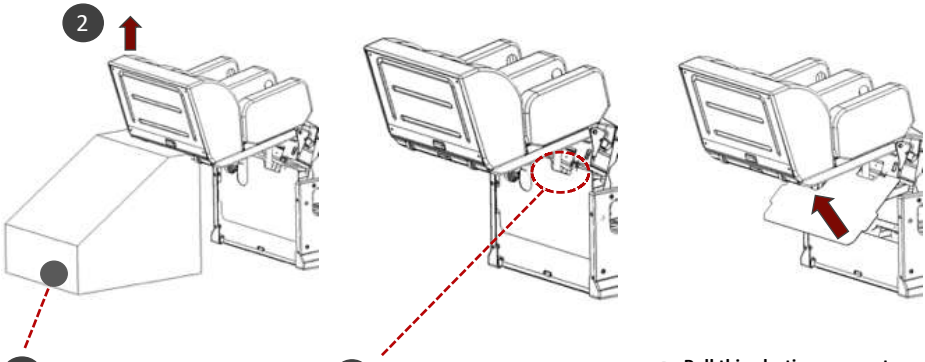

3 **Insert Footrest Packing Box**

4 **Insert all footrest cables and Air tubes thru this aperture**

5 **Pull this plastic cover up to provide access for all connector installation in Steps 6 & 7**

Fig.4: Footrest Assembly

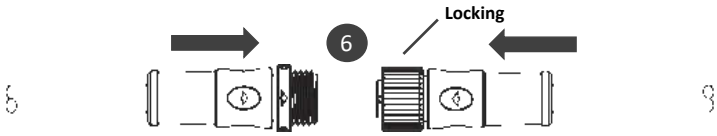

Roller and Heat Electrical Connectors (5 Connectors, Make sure the color marks/numbers are matched)

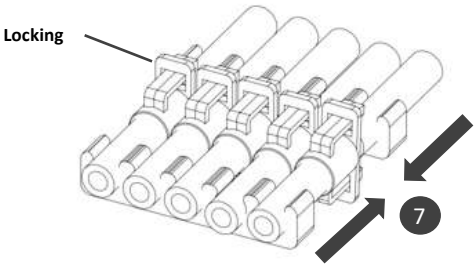

Foot Massage Airbag Connectors (6 connectors in a fixture, Make sure the color marks/numbers are matched)

Fig.5: Instructions for Footrest Air Tubes and Cables Assembly

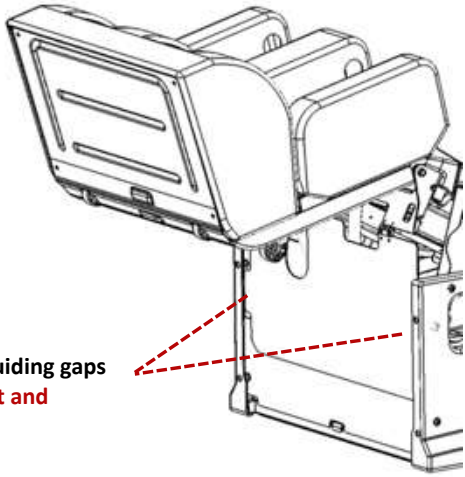

8 **Insert the front cover into the guiding gaps (Make sure the front cover is flat and aligned properly)**

Fig.6: Footrest Assembly: Chair Front Cover Reset

ATTENTION: For more detailed instructions, please watch i11 Max Plus Series installation videos at www.LuracoChairs.com

Step 3: Assemble the Armrests

Please refer to Fig. (7-8) and follow the steps (1-5) below to install the armrests.

1. Insert the metal tab on the armrest into the located slot on the chair frame **(Fig. 7, Step 1).**
2. Install 2 knob-screws to secure the armrest metal plate onto the seat frame **(Fig. 7, Steps 2).**
3. Assemble armrest air connectors (**2 pcs**). **Make sure the color marks/numbers are matched (Fig. 8, Step 3).**
4. Assemble electrical connectors (**2 pcs**). **Make sure the color marks/numbers are matched, and connectors are locked by tightening the locking nut (Fig. 8, Step 4).**
5. **Repeat steps (1 through 4) above for the second armrest assembly.**

One USB connector needs to be connected for the Wireless Controller charging on the Right Armrest (Fig. 8, Step 5).

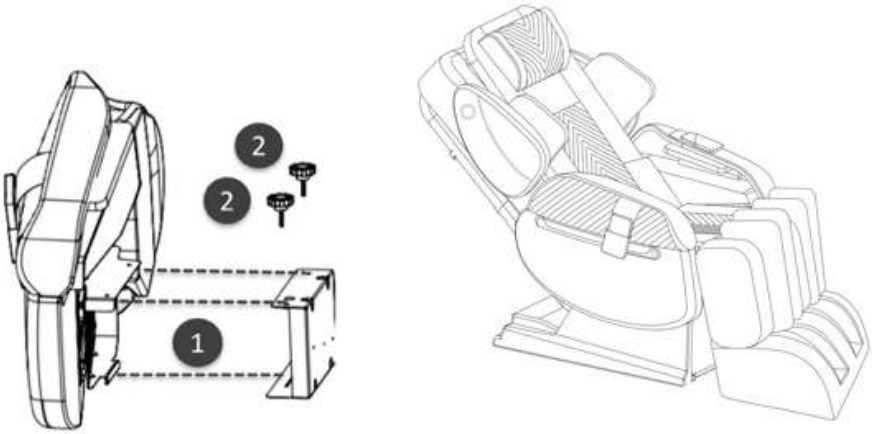

Fig.7: Armrest Installation

ATTENTION: NEVER SIT ON ARMRESTS OR LEGRESTS!

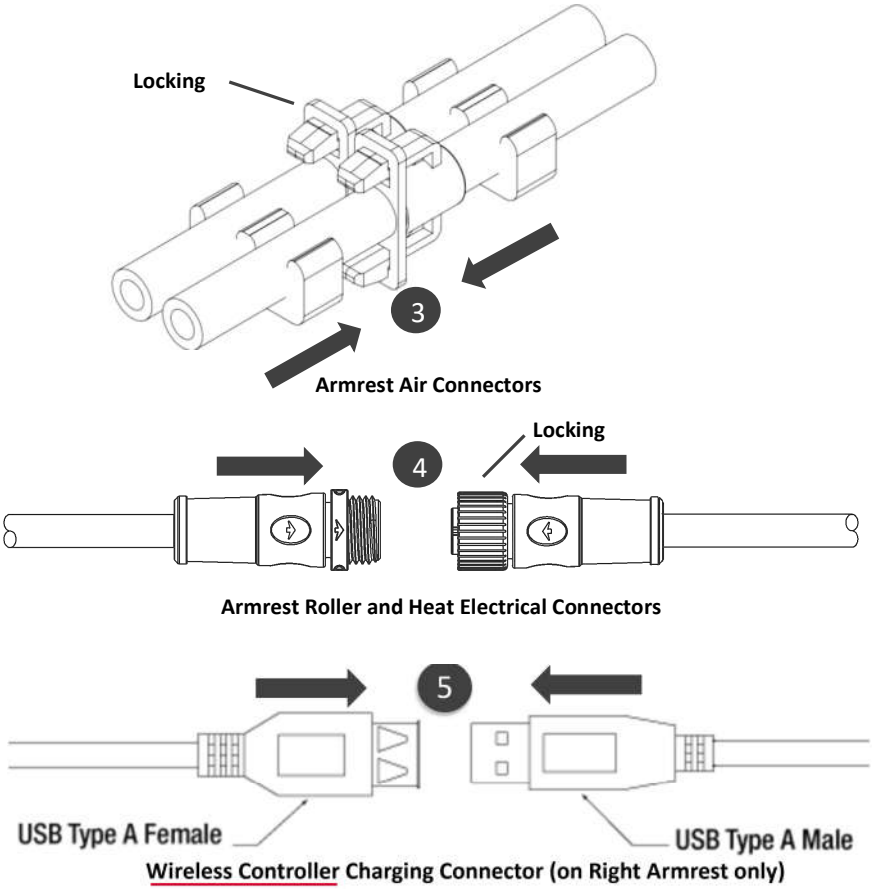

Fig.8: Air and Electrical Connections

ATTENTION: For more detailed instructions, please watch i11 Series installation videos at www.LuracoChairs.com

Step 4: Wireless Controller

Connect wireless controller to the charging cable then place it into the controller pouch on the armrest.

Note: Keep the wireless controller charged after each use to avoid battery depletion and operational disruption.

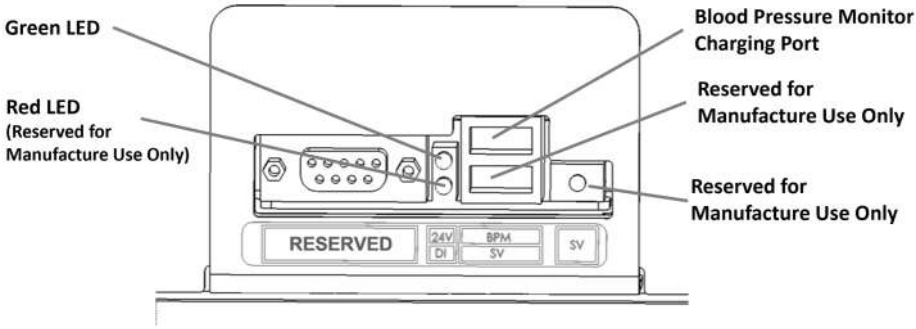

Fig.9: Back Panel

Note: Blood Pressure Monitor Charging USB Port is for i11 Special, Billionaire, and Royal Editions Only.

ATTENTION! BEFORE TURNING POWER ON

1. Be sure there are no objects behind the chair before reclining.
2. Be sure power cord is plugged into the chair power inlet.
3. Power is turned on/off by a switch near power inlet (Switch to position “I” to turn on and position “0” to turn off).
4. Use the remote to choose the massage functions.

III. UNDERSTANDING THE CONTROL FEATURES

Fig.10: Main Screen and Start/Stop Button

1. Quick Instructions for Main Screen

- **Auto:**
  Allows user to select one of the 9 automatic massage programs.
- **Manual:**
  Allows user to customize a massage profile that best fits the body needs for optimal results. After an optimized profile is created, user can save it under “Users Profile”. User can then recall the saved profile next time chair is used.
- **Settings:**
  Allows user to setup system preferences and passcode protection.
- **Info:**
  Displays health information related to the human body acupressure and reflexology points. It’s designed to help the user understand and customize a massage profile that is best suited for them.
- **Heat:**
  Allows user to turn on/off the heat and to adjust the heat level.
- **Adjust:**
  Allows user to adjust the chair to their preferred position and chair parameters. The chair position and parameters will be stored in user profile when saved.
- **Pause/Play:**
  Allows user to Pause and Resume a massage cycle.
- **Intensity:**
  Unlike many other chairs on the market, the i11 Series give the user control of the massage intensity for different parts of your body. Intensity levels are also stored in user profile when saved.
- **Users:**
  Allows user to save customized massage profiles, chair position, and intensity levels.

2. Start/Stop Button

Starts and stops the massage chair. The default timer for each massage session is 20 minutes. Pressing this button a second time will put the chair back to its initial position automatically.
When time is up, if the sleep setting is checked, the chair maintains its position to avoid sleep disruption.

3. Automatic Massage Modes

- **Health Mode:**
  Specifically designed for health enhancement that mainly focuses on health aspects like releasing muscle strain, improving blood flow,

soothing anxiety and helps to relieve depression. This mode is the default massage mode when you start the chair. Heat therapy is automatically turned on in this mode.

- **Soft Mode:**
  Applies a VERY soft, mainly air massage throughout the body. This mode is good for a relaxed and comfortable feeling for people that haven't used a massage chair before. No stretching function in this mode.

- **Demo/Quick Mode:**
  Provides a quick full body massage. It combines the best features of all massage modes. It allows user to experience a bit of everything in a short cycle. Heat therapy is automatically turned on in this mode.

- **Morning Mode:**
  Designed specifically for morning use, focusing on energizing the body by providing stretching, mobilizing joints and promoting flexibility with some muscle exercise. No stretching function in this mode.

- **Night Mode:**
  Designed specifically for evening/night use to enhance sleep, focusing on relieving postural stress after a day's work. It also helps relieve anxiety, depression and headaches.

- **Sport Mode:**
  Geared towards people involved in sporting activities to help prevent or treat injuries. It focuses on areas of the body that are overused and stressed from repetitive and aggressive movements. It promotes flexibility, reduces fatigue, improves endurance, and reduces muscle soreness. This mode provides a high intensity massage program with more focus on the hands and feet. No stretching function in this mode.

- **Shiatsu Mode:**
  Provides a high intensity and point based massage with varied and rhythmic pressure on different parts of the body. It helps relieve severe tension in muscles and connecting tissues, relieves blockages and rejuvenates the body. No stretching function in this mode.

- **Stretch Mode:**
  Focuses on stretching and promotes mobility throughout the body. It stretches muscles, enhances muscular coordination, helps improve posture/flexibility and provides a greater sense of well-being.

- **TV/Recliner Mode:**
  Puts the chair into a comfortable position for watching TV or reading. This allows the user to adjust the chair to preferred position. Timer is off in this mode.

4. Manual Massage Modes

The i11 Series allows the user to easily customize the massage profile and save. You can save up to 8 different user profiles. Touch a button on the body diagram screen to **add or remove** the massage for specific parts of the body. For back massage, first select a back area, then press more for massage options. The selected massage profiles will be highlighted in a blue color on the buttons. If you want to target on spot on your back, use the spot mode to adjust the roller position. More details in Fig.11-12 below.

Fig.11: Manual Control Screen

Fig.12: Manual Mode Descriptions

Program is active **Program is inactive**

<u>NOTE</u>: Tapping is not available on head area for safety reasons

5. System Settings

Allows for the setup of system preferences and passcode protection (Fig.13).

Fig.13: System Settings Screen

5a. Voice Response and Relax Music Selections

This screen (Fig. 14) allows the user to turn Voice Response and Relaxing Music on/off by checking or unchecking each feature. There are 7 different language options that can be chosen for the i11 Series with **English** as the default language. You can also enjoy 6 pre-installed relaxing music. The speaker volume can also be adjusted on this screen.

Fig. 14: Voice Response and Relax Music Selections

5b. Massage Time

Massage times can be set for as short as 5 minutes or as long as 30 minutes.

5c. Passcode

The Luraco i11 Series come with a security feature that allows you to lock it if you don't want others to use it. The default passcode to unlock the screen is: **1234**

5d. Sleep Setting

Many people like to fall asleep during a massage and don't want to be disturbed when the massage ends. When the **Sleep Setting** is checked (Fig. 15), the chair will let you remain asleep after your massage has ended. When you wake up, simply hit the **start/stop button** and your chair will return to the starting position. If unchecked, your chair will gradually return to the start position when the massage time has ended.

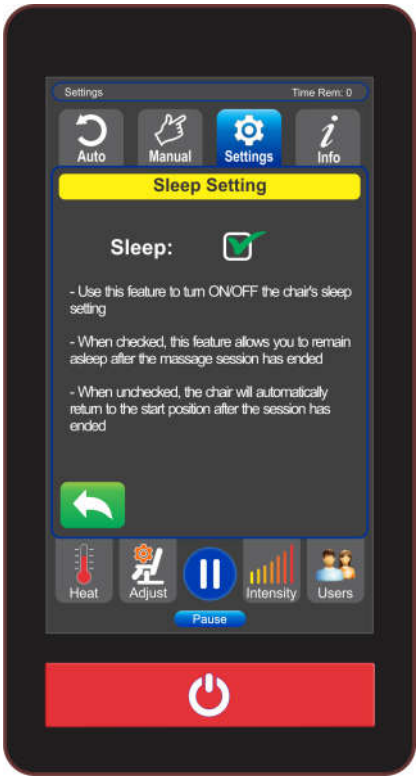

Fig.15: Sleep Setting

5e. System Information

The information found here is what Luraco Technical Support would ask for if there is ever a need for diagnostic or service issues.

5f. Bluetooth Speaker

The i11 Series use an integrated, high-quality and high-power (10 Watts) speaker system using the latest Bluetooth technology for relaxing music and voice responses.

By default, the Bluetooth speaker is connected to the wireless controller for voice response and music playing.

If the Bluetooth speaker is disconnected, you can follow steps below to reconnect the Bluetooth Speaker in the chair.

On the wireless controller, go to the settings.

1. Select **"Luraco BT Music"**
2. **pair**. If **"Luraco BT Music"** is not visible on the phone, reboot the chair and/or the phone. Also, make sure the Bluetooth Speaker is turned on from the remote Settings.

6. Heat On/Off and Intensity Settings

This screen (Fig. 16a) allows the user to turn heat function on/off and control intensity level.

There are **5** heat levels with 1 being the lowest and 5 being the warmest. Simply touch **HEAT** to start this feature except for the Health, Demo, and Shiatsu Modes where heat turns on automatically.

Note:

The stay warm heat feature will always keep the chair leather surfaces warm and ready to use, especial in winter time. This feature is only available on the controller when the chair is in idle mode. When chair keep warm is turned on, it consumes power, depending on intensity settings of the heat, the chair power supply cooling fan tunes on sometimes to keep the power supply cooled, and you may hear the fan running.

Fig.16a: Heat control

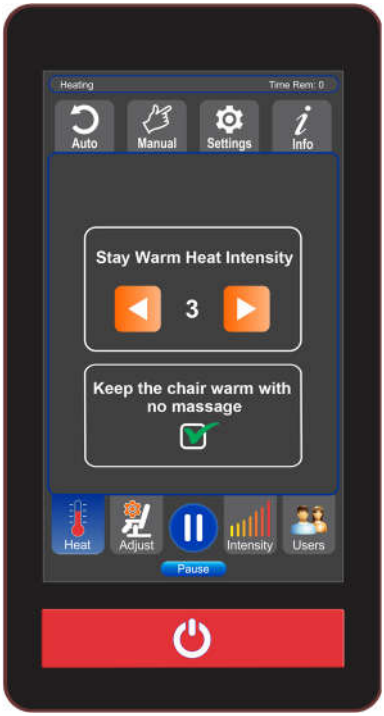

Fig.16b: Stay Warm Heat control

Stay Warm Heat screen (Fig. 16b) allows the user to turn “Warm chair – Warm body” function on/off and control intensity level.

When the chair is off, just simply touch Heat then check “Keep the chair warm” and adjust the warm intensity. There are **5** warm levels with 1 being the lowest and 5 being the warmest.

Note: Heat for massage and “Stay warm heat” are working independently.

7. Chair Adjustments

This screen allows the user to adjust the chair positions and fine-tune some performance parameters to their preferences. The chair position will also be stored under “User Profile” when saved. (Fig.17).

Fig.17: Chair Adjustments

Note: When the chair is doing automatic stretching, some buttons are greyed out to avoid user’s interruption.

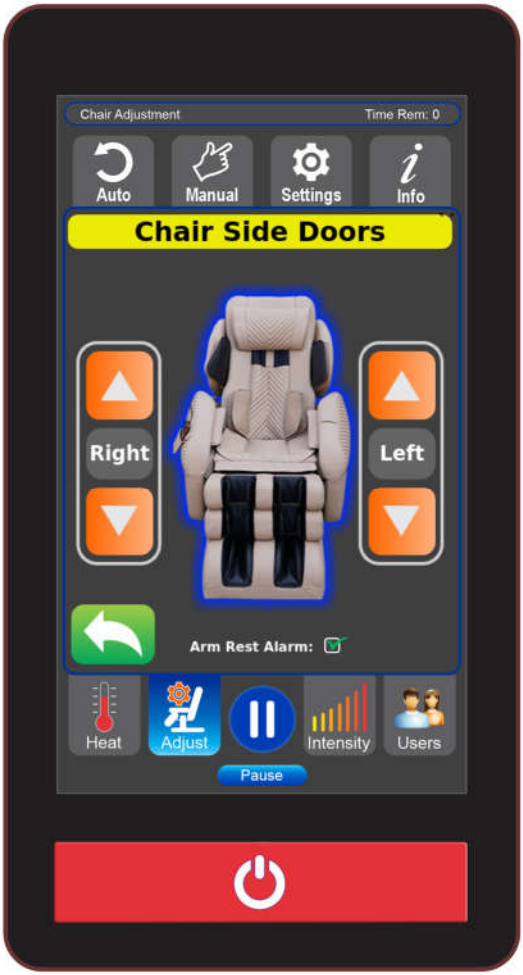

Fig.18: Armrest Adjustment (Under Armrest Control)

<u>Note:</u> Unchecking the Armrest Alarm on this screen will turn off the door motion safety alarm sound.

8. Intensity Adjustments

This screen allows the user to manually adjust intensity settings for 6 different zones of the body.

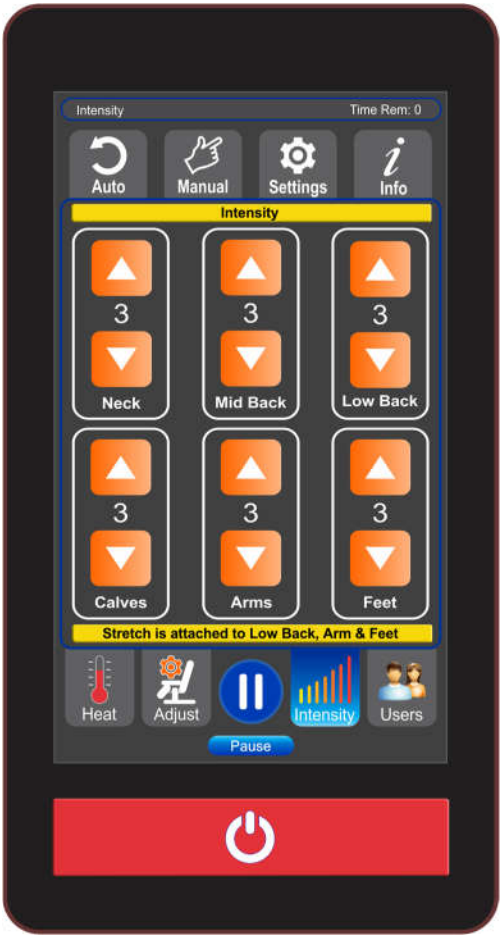

Fig.19: Intensity Adjustments

9. User Profiles

How to Save a User Profile:

After chair adjustments have been made, hit **Users** -> **Save** -> Enter name of new user -> press **ENTER** -> press **DONE**, the "**successfully saved**" message appears. Up to 5 unique users can be saved. During body scan, the save button is greyed out.

Fig.20: User Profile Save Screens

How to Open a Saved User Profile:

When returning to your chair you can bypass the body scan by going to "**USER**', then '**OPEN**" and clicking on the previously saved profile. Chair will return to the last saved settings. Only saved profiles will show.

Settings can be changed by making the adjustments desired and then hitting the '**SAVE**' button again.

If wrong profile is chosen, select "**Cancel**", choose the correct profile and then "**OK**".

Fig.21: User Profile Open Screens

9. i11 Special, Billionaire, and Royal Editions Only

Fig.22: Customized Remote Screens

For customers who have ordered the Special Edition, the start screen will show the owner's name as shown in Figure on the left.

For customers who have ordered the Billionaire Edition, Royal Edition, the start screen will show the owner's photo as shown in Figure on the right.

IV. HOW TO USE I11'S UNIQUE FEATURES

1. Powered Armrest Open/Close for Easy Access

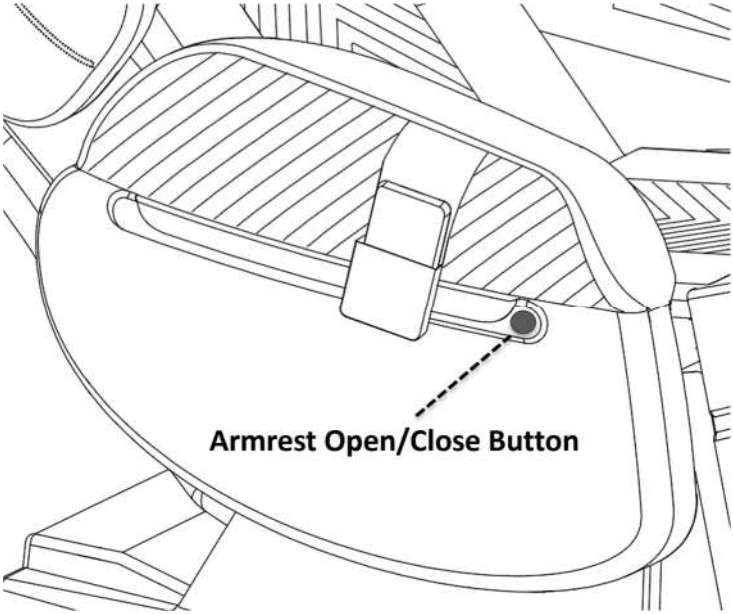

Fig.23: Armrest Open and Close for Easy Side Access

To open/close the Armrest, simply press the button on the Armrest (**Fig.23**).

The Armrest can also be controlled from the Wireless Remote under the **Adjust** Screen (**Fig.18**). Door Safety Alarm can be turned off from the same screen.

Note: During a massage session, if user wants to stop the massage but the Wireless Remote Controller is not responding, user can press this button to stop massage session and restore the chair position.

ATTENTION: NEVER SIT OR HANG ANYTHING ON THE ARMRESTS OR LEGRESTS!

2. Shoulder Massager Position Adjustment

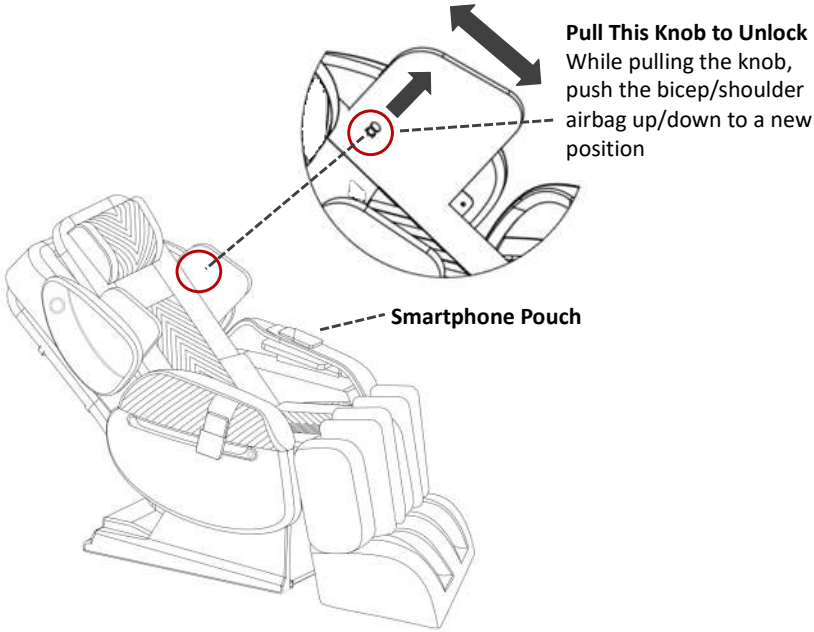

Fig.24: Bicep/Shoulder Massager Position Adjustment

3. Some Helpful Tips When Using i11 Series Medical Massage Chairs

1. Sit back and relax with your head resting against the backrest for body scan and shoulder detection. During the body scan process, please do not operate the Remote control.
2. For a more accurate body scan, move the pillow up or flip it to the back.
3. If you prefer a stronger neck massage, please flip the pillow to the back.
4. Footrest extension sensor is located below the right heel. Pressing on this sensor will extend the footrest. For accurate measurement, please place your heel all the way in.
5. If you want to skip the body scan and get directly to a massage, you should first save a user profile and open it.
6. Luraco i11 Series implements a high-speed processor and advanced embedded operating system (OS) and complex software applications. Thus, it requires system reboot sometimes for software to reset and sensors and electronics to be reinitialized. We recommend a chair reboot whenever you feel a chair reset is needed.

4. Health Benefits of Massage

Massage is the manipulation of superficial layers of muscle and connective tissue to enhance function and promote relaxation and well-being. Peer-reviewed medical research has shown that the benefits of massage include pain relief, reduced anxiety and depression, and temporarily reduces blood pressure, heart rate, and state of anxiety.

- **Pain and stress relief:** Relief from pain due to muscle-related injuries and other causes is cited as a major benefit of massage. In one study, cancer patients self-reported symptomatic relief of pain. Acupressure or pressure point massage could be beneficial in relieving back pain.
- **State of anxiety:** Massage has been shown to reduce a state of anxiety.
- **Depression:** Massage has been shown to reduce sub-clinical depression.
- **Blood pressure and heart rate:** Massage has been shown to reduce blood pressure and heart rate as temporary effects.
- **Sleep better:** Massage has been shown to help improve deep sleep at night.

V. HEALTH CARE DEVICE (BLOOD PRESSURE MONITOR)

The iRobotics 11 Max Plus Series Medical Massage Chair has the capability to operate an optional health monitoring device. The device measures blood pressure and heart rate of the user. Connect the blood pressure monitor to blood pressure port on the back panel of the chair to charge the device before operating (**Refer to Fig.9**).

This device is an optional product but is included with the i11 Special Edition, Billionaire Edition, and Royal Edition.

VI. TROUBLESHOOTING THE MASSAGE CHAIR

WARNING: Unplug the power cord before attempting any troubleshooting or service.

Luraco i11 Series comes with advanced state-of-the-art electronics and software technologies, which support self-diagnostic features to detect individual failures of critical components in the massage system. The chair has different LED indicators, which help the user to narrow down a troubleshooting failure, if any.

LED Function/Color	Meaning
Green LED (normally solid)	Solid green means 24V power supply is good.
Red LED (Normally flashing)	Diagnostic information, this LED is for manufacturer's use only

Table 1: LED Functions

Problem/Issue	Possible Cause	Trouble Shooting Method
ALWAYS TRY THIS FIRST	**Reset the software for chair and controller**	**1. Reboot the chair by turning power switch OFF, wait until all LEDs are off before turning it back ON.** **2. Reboot the wireless controller by press and hold the power button on the side of controller.**
Chair does not power	1. Bad connection between power plug and socket 2. No power at outlet 3. Bad fuse	1. Unplug and reconnect power cord again. 2. Check to make sure power is available at the wall outlet. If there is power, the red light on power switch is on. 3. Replace with fuse located near power switch
Wireless controller has no power	Battery is depleted	Charge the controller **Note: Always keep the Wireless Controller connected to charging cable after each use.**
Back or Seat airbags do not inflate	Air tubes are bent under the cushion, or air tubes not connected	Pull the cushion up and check the air tubes and connectors
No voice response or No music	Bluetooth speaker connection lost	1. Reboot the chair and the wireless controller. If problem not fixed, go to step 2 below. 2. Go to Settings on wireless controller and select Bluetooth connection. Follow the steps to reconnect the BT speaker
Noise from any roller	Bearings or parts need relubrication	Add grease to the parts that make noise
Controller screen is locked	Passcode protection is enabled	Enter default passcode “1234” to unlock or access all features of the chair

Table 2: Quick Trouble Shooting Guide

Note: If problem(s) are not found in the trouble-shooting guide, please turn off power supply and contact the manufacturer for assistance.

VII. MAINTENANCE INSTRUCTIONS:

This product should be maintained on a regular basis to promote cleanliness and to keep the mechanical internal system in optimal working order. It is important to keep the chair free of dust and debris to ensure it runs smoothly and to prevent damage or injuries during operation. Some mechanical parts should also be adjusted and in some cases, lubricated periodically to keep it in good working order. Use only leather care products for cleaning and maintaining the leather.

ATTENTION: Always turn off power switch and unplug the power cord before cleaning or servicing the chair.

User Height	Up to 6’10”
User Weight	Up to 300 lbs.
Power Consumption	~200 Watts (Max)
Recline Angle	120-170 Degrees
Roller Track Length	60 inches
Pre-programmed Auto Functions	9 Modes
Automatic Timer Shut-Off	Up to 30 Minutes
Leg Rest Length Extension	Up to 8 in
Chair Weight	~ 310 lbs.
Max Height	~ 48 inches
Max Width	~ 38 inches
Max Length (Reclined)	~ 87 inches

Table 3: i11 Series Specifications

VIII. WARRANTY INFORMATION

a. Introduction

Luraco Technologies is dedicated to offering our valued customers the best massage chair buying experience available. As part of this commitment, the company works very hard to provide customers with the best warranty plan available. We guarantee any defective massage chair will be repaired or replaced (if not repairable) during the effective warranty period.

b. What is covered in the warranty:

1) For Home Use:

- This warranty includes parts and in-home labor costs covered for the first 3 years at no cost to the customer.
- This warranty includes an addition 2 years for parts and 10 years for leather at no cost to the customer.
- This warranty may require cooperation of chair's owner for some over-the-phone trouble-shootings.

Products	In-House Service	Parts	Leather
i11 Series	**3 (Years) ***	**5 (Years)**	**10 (Years) "Guaranteed No Tearing"**

2) For Commercial Use:

- This warranty includes parts and labor costs covered for the first 6 months at no cost to the customer.
- This warranty includes an additional 6 months for parts and 1 year for leather at no cost to the customer.
- This warranty may require cooperation of chair's owner for some over-the-phone trouble-shootings.

Products	In-House Service	Parts	Leather
i11 Series	**6 (Months) ***	**1 (Year)**	**1 (Year) "Guaranteed No Tearing"**

***Does not include Alaska, Hawaii, Puerto Rico, and International Sales**

c. What is NOT covered:

- This warranty does not cover any loss or damage resulting from: improper installation, alterations or modifications of original condition or unauthorized repairs.
- This warranty does not cover damage resulting from improper use of electrical/power supply, electrical disturbances and power surges, cracked remote control screens, cosmetic changes, improper operating environment, or damage caused by animals or liquids of any kind.
- This warranty does not include any shipping expenses incurred.
- This warranty does not apply to normal wear-and-tear including leather or fabric covering.

- This warranty does not cover damages from floods, storms, fire or other natural disasters.
- The warranty does not apply if the product has been damaged physically, whether intentional, accidental or by neglect: including but not limited to stains, fluids, mold, water damage, pet or insect damage, cuts, burns, loss of use during the period the product is at a repair facility, or otherwise awaiting parts or repair; and products purchased from unauthorized dealers.
- Unnecessary service. If no problem is found by service technician, you may be charged for service calls, labor, and travel costs.
- Display models that have been on showroom floor for more than twelve (12) months are not covered under this limited warranty.
- Warranties are non-transferable and apply only to the original purchaser at the original location. If moving, please contact Luraco at 817-633-1080 before you move for more details.

d. Implied Warranty

- Any implied warranties shall be limited to the duration of the 3-year portion of this warranty for home use and 6-month portion of this warranty for commercial use. With regard to structural frame, it is limited to the duration of the 5-year portion of this warrantyfor home use, and 1-year portion of this warranty for commercial use.
- In no case will Luraco be liable for incidental or consequential damages, whether such damages are claimed on basis of breach of warranty, breach of contract, negligence or strict/product liability, including without limitation, damage to property (other than the product) or other economic losses.
- Luraco shall not be liable for any personal injury, property, or any incidental or consequential damages of any kind resulting from malfunctions, defects, misuse, improper installation or alteration of this product.

e. Extended Warranty Plan

Luraco massage chairs come with a high expectation of performance and reliability and should last for many years. However, all products have a defective rate. If something does go wrong, Luraco offers a purchased Extended Warranty Plan within ninety (90) days of original chair purchase.

The Extended Warranty Plan provides home use customers an additional 2-years of comprehensive protection for Luraco massage chairs. You can rest assured that your massage chair will be taken care of as soon as possible.

Note: Extended warranty plan is available for in-home use application only. Luraco does not offer this plan for commercial use.

f. How to get warranty service:

- Customer may obtain service advice by contacting Luraco Health & Beauty LLC Customer Service Toll-free at 1-800- 483-9930
- Customer must provide proof of purchase to claim any warranty.
- Customer must obtain a return authorization number in order to ship the chair to a service center.

g. Important Return Instructions:

Luraco wants you to be completely satisfied with your purchase. However, in the event that you decide to return a purchased chair, please follow the steps below:

1. You have 30 calendar days to return the chair from the date you received it.
2. A return must be coordinated by the dealer where the chair was purchased.
3. The dealer will get a return authorization by calling 817-633-1080, option 2.
4. The chair must be returned in its original packing box to be eligible for a refund.
5. Carefully pack the chair in its original box and place it on a standard 48” x 40” pallet to avoid damage during shipping.
6. Before packing your chair, be sure to enclose:
   a. Your name with full shipping address and telephone number
   b. A dated receipt for PROOF OF PURCHASE
7. Take pictures of your chair before packing it up.
8. Take pictures of boxes upon pick up for return shipping. Include a document detailing the problem you are having with your chair.

NOTE: All orders shipped outside the continental United States are non-returnable and non-refundable, including states and territories such as Hawaii, Alaska, Puerto Rico, and Guam. Chairs with special personalization orders cannot be returned.

Incurred shipping costs are nonrefundable. All return shipping costs must be prepaid by the customer.

IX. DISCLAIMERS

Limited warranty and liability: Information in this document is believed to be accurate and reliable. However, Luraco Health & Beauty, LLC does not give any representations or warranties, expressed or implied as to the accuracy or completeness of such information and shall have no liability for the consequences of use of such information.

In no event shall Luraco Health & Beauty, LLC be liable for any indirect, incidental, punitive, special or consequential damages (including - without limitation - lost profits, lost savings, business interruption, costs related to the removal or replacement of any products or rework charges) whether or not such damages are based on tort (including negligence), warranty, breach of contract or any other legal theory.

Notwithstanding any damages that a customer might incur for any reason whatsoever, Luraco Health & Beauty, LLC aggregate and cumulative liability towards the customer for the products described herein shall be limited in accordance with the Terms and conditions of commercial sale of Luraco Health & Beauty, LLC.

Right to make changes: Luraco Health & Beauty, LLC reserves the right to make changes to information published in this document, including without limitation specifications and product descriptions, at any time and without notice. This document supersedes and replaces all information supplied prior to the publication hereof.

Suitability for use: Medical research has shown that the benefits of massage include pain relief and reduced depression. Overall, better health and wellness have been reported with the use of massage.

However, this product is not intended to diagnose, treat, cure, or prevent any disease. It is not designed, authorized or warranted to be suitable for use in life support, life-critical or safety-critical systems or equipment, nor in applications where failure or malfunction of a Luraco Health & Beauty, LLC product can reasonably be expected to result in personal injury, death, or severe property or environmental damage. Luraco Health & Beauty, LLC accepts no liability for inclusion and/or use of Luraco Health & Beauty, LLC products in such equipment or applications and therefore such inclusion Limited warranty and liability: Information in this document is believed to be accurate and reliable. However, Luraco Health & Beauty, LLC does not give any representations or warranties, expressed or implied as to the accuracy or completeness of such information and shall have no liability for the consequences of use of such information.

Customer Assistance:

For assistance with this product, please visit: www.LuracoChairs.com
Or call: 1-817-633-1080, Monday – Friday, 8:30 am to 5:00 pm (CST)

LURACO HEALTH & BEAUTY, LLC.
1140 107TH STREET
ARLINGTON, TX 76011, USA.
TEL: 817-633-1080
WWW.LURACOCHAIRS.COM

PLEASE READ AND SAVE THIS IMPORTANT USER'S MANUAL

© All Rights Reserved, Sep 2026.